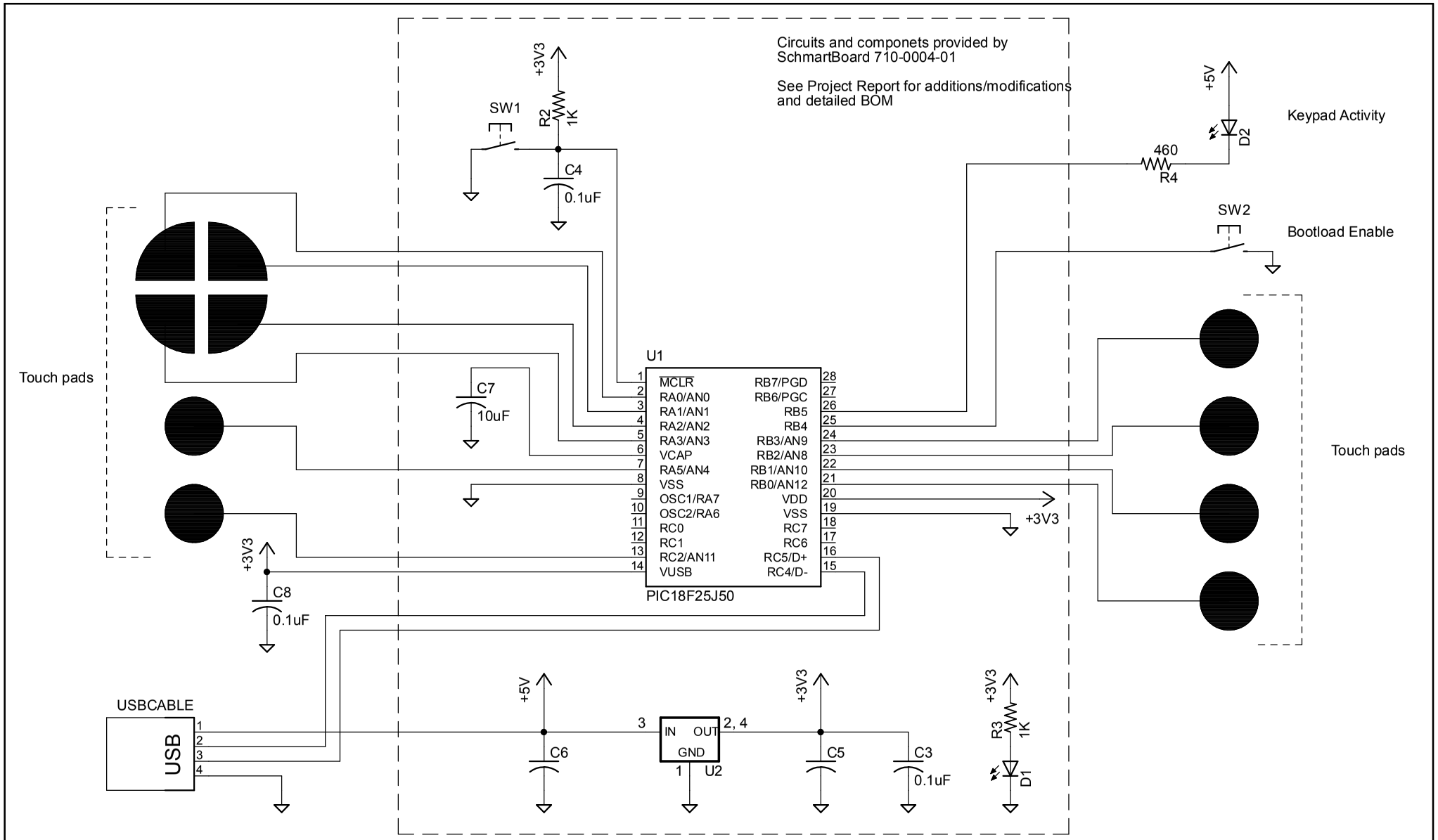

Copyright Dave Wickliff 2010

Project Number MP0012

Game Touch - Touch keypad for gaming

TITLE: page1

Document Number:

REV:

Date: 12/31/2010 7:47:06 PM

Sheet: 1/1